SM-A217F/M

SAMSUNG CONFIDENTIAL
THIS DOCUMENT CONTAINS CONFIDENTIAL
PROPRIETARY INFORMATION THAT IS
SAMSUNG ELECTRONICS CO'S PROPERTY.
DO NOT DISCLOSE TO OR DUPLICATE FOR OTHERS
EXCEPT AS AUTHORIZED BY SAMSUNG.

	CIS/SWA/SEA	LATIN
FDD	1/ 2/ 3/ 5/ 7/ 8/ 20/ 28	1/2/3/4/5/7/8/12/13/17/20/26/28/66
TDD	38/ 40/ 41	38/ 40/ 41
3G	1/ 2/ 5/ 8	1/2/4/5/8
2G	850/ 900/ 1800/ 1900	850/900/1800/1900

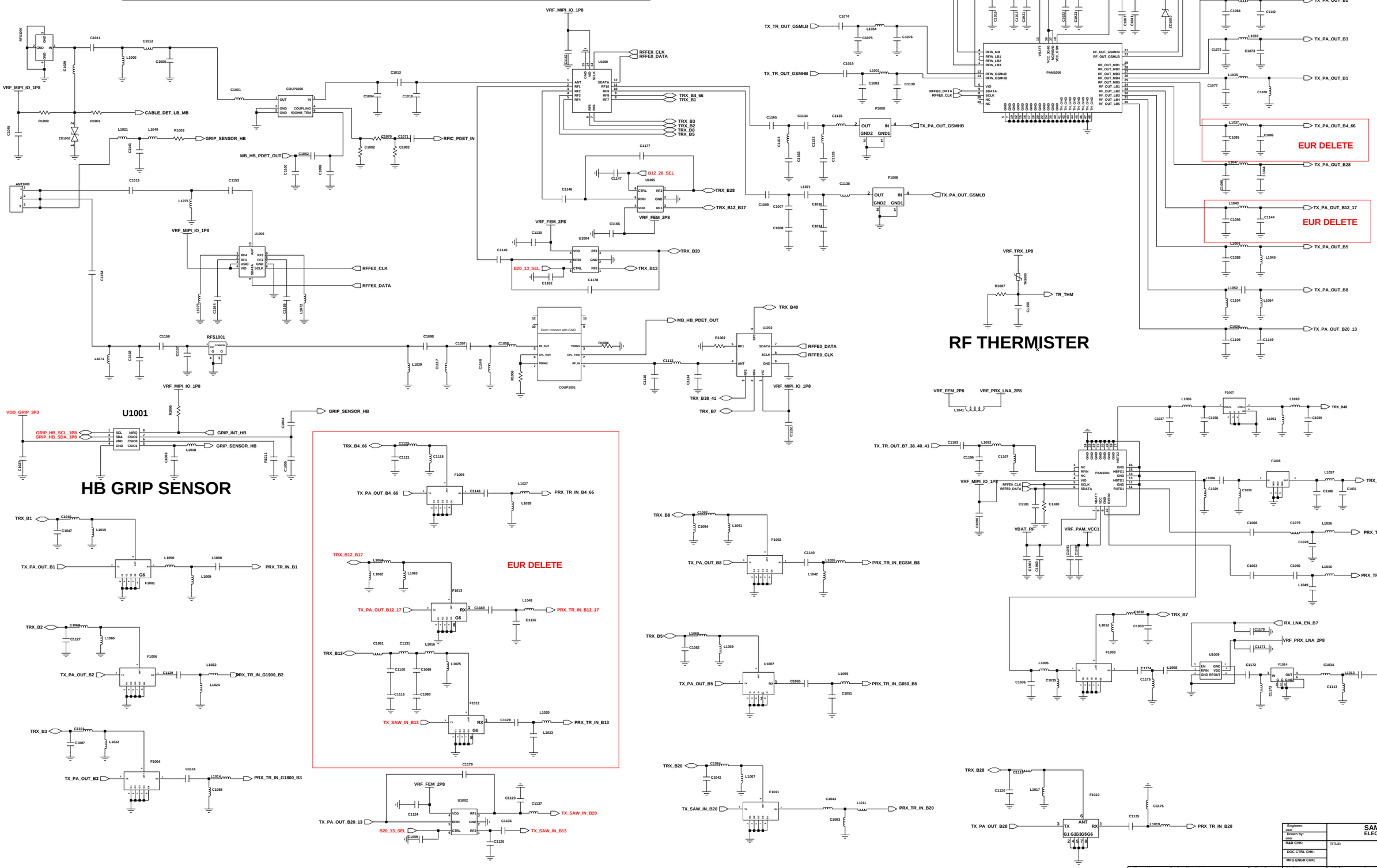

Engineer:	SAMSUNG ELECTRONICS
Drawn by: user	
R&D CHK:	TITLE:
DOC CTRL CHK:	Size: 16 1 12 A
MFG ENGR CHK:	
QA CHK:	REV / Drawing Number: / Page: 1

Changed by: user | Date Changed: Monday, April 23, 2018 | Time Changed: 8:49:04 pm

SAMSUNG CONFIDENTIAL
THIS DOCUMENT CONTAINS CONFIDENTIAL PROPRIETARY INFORMATION THAT IS SAMSUNG ELECTRONICS CO'S PROPERTY. DO NOT DISCLOSE TO OR DUPLICATE FOR OTHERS EXCEPT AS AUTHORIZED BY SAMSUNG.

DRX

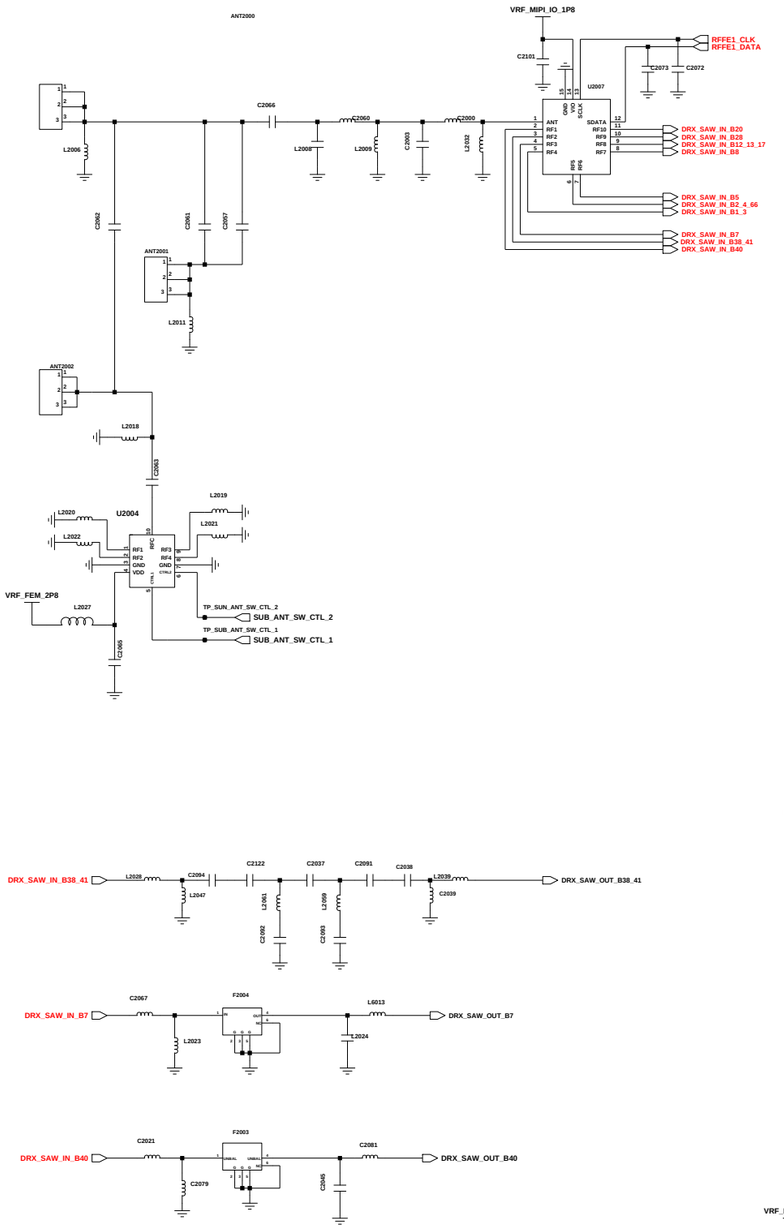

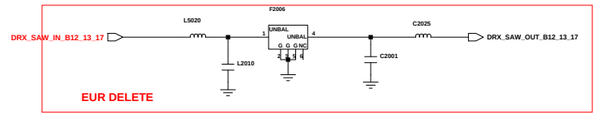

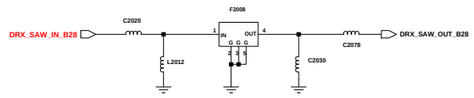

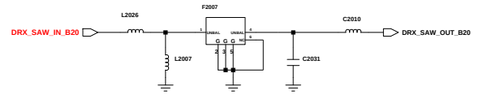

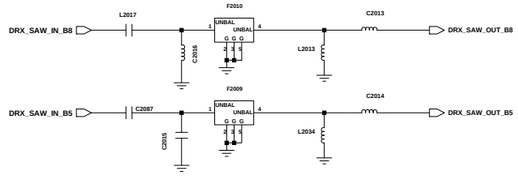

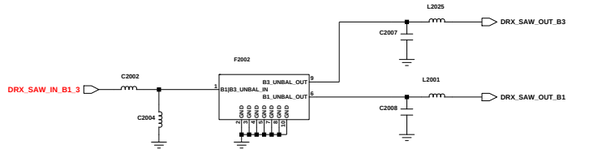

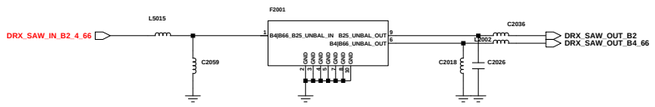

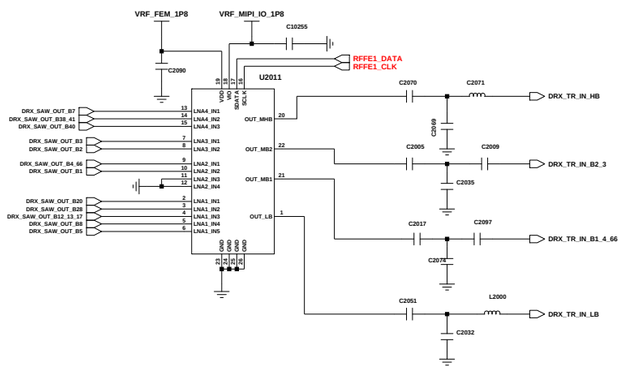

APT MODULATOR

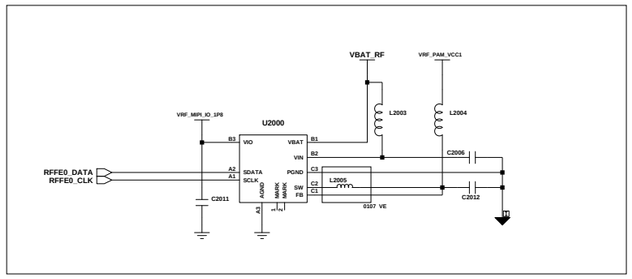

TRANCEIVER

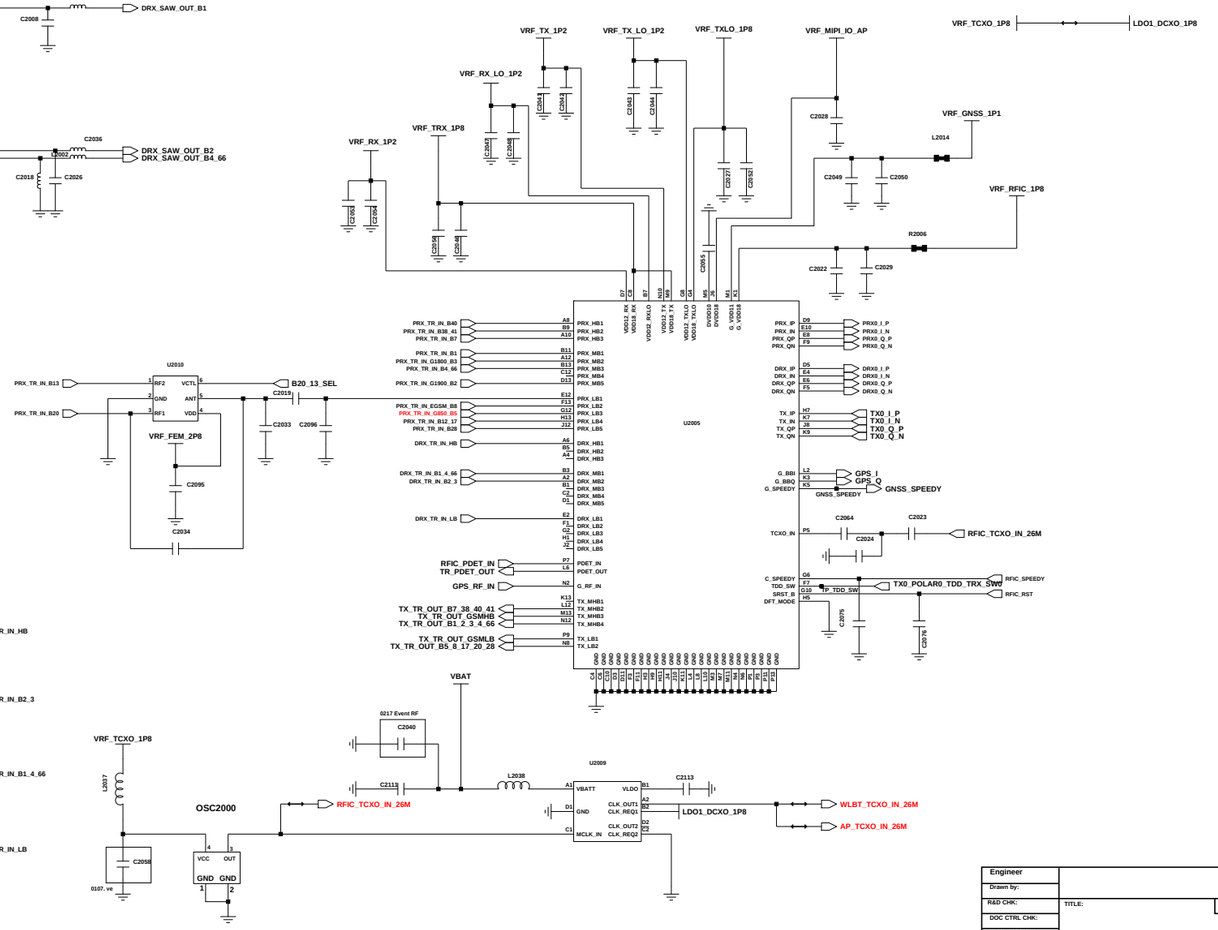

Engineer	
Drawn by:	
R&D CHK:	TITLE:
DOC CTRL CHK:	
MFG ENGR CHK:	
QA CHK:	Drawing Number 2/7

Changed by: | Date Changed: | Time Changed: | Size:

SAMSUNG CONFIDENTIAL
THIS DOCUMENT CONTAINS CONFIDENTIAL
PROPRIETARY INFORMATION THAT IS
SAMSUNG ELECTRONICS CO'S PROPERTY.
DO NOT DISCLOSE TO OR DUPLICATE FOR OTHERS
EXCEPT AS AUTHORIZED BY SAMSUNG.

BT/WIFI

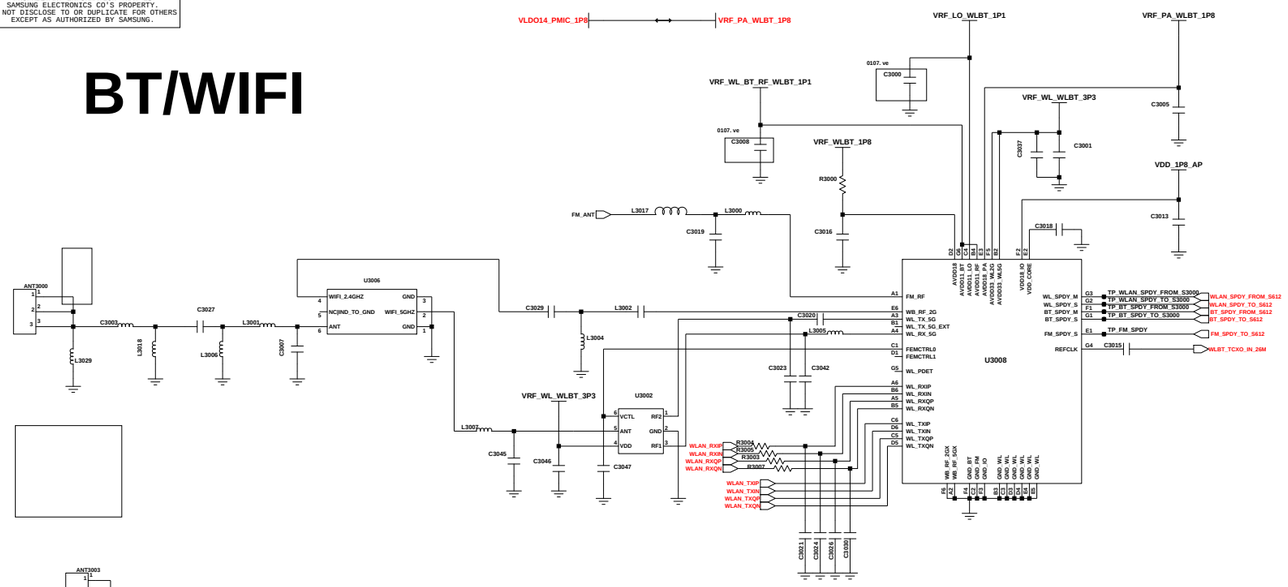

GPS

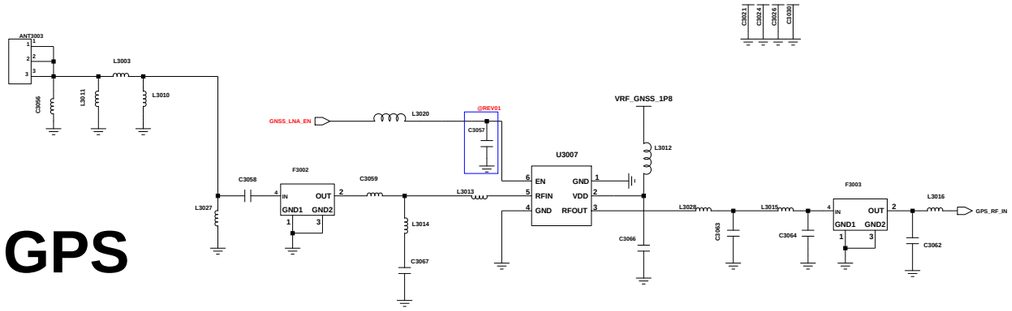

NFC(Option)

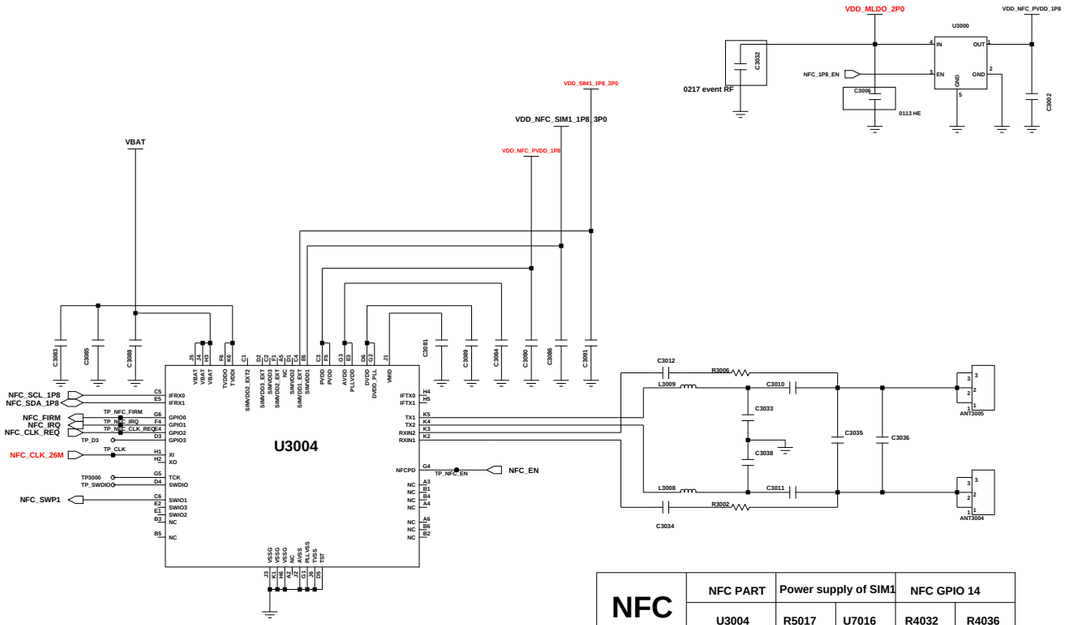

NFC	NFC PART	Power supply of SIM1		NFC GPIO 14	
	U3004	R5017	U7016	R4032	R4036
NFC	CONNECT	short	open	10K ohm	open
nonNFC	NC	open	short	open	10K ohm

SENSORS

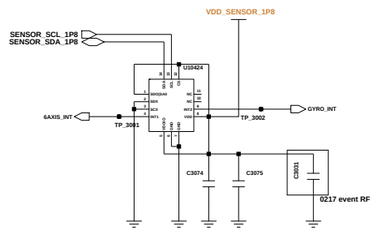

6 AXIS(ACC+GRYO)

STM(3x2.5)

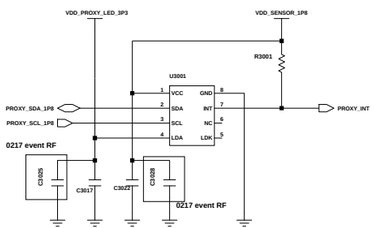

Proxi Sensor

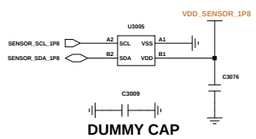

DUMMY CAP

MAGNETIC

FINGER PRINT SENSOR

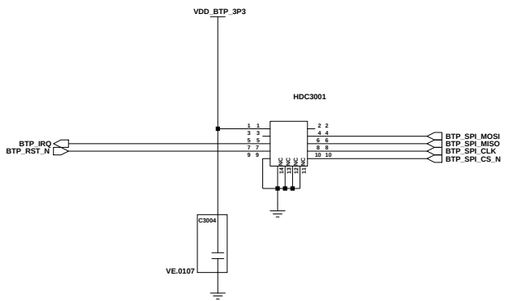

Finger Print Sensor

Engineer:				
Drawn by:				
R&D CHK:	TITLE:			Size:
DOC CTRL CHK:				
MFG ENGR CHK:				
QA CHK:	REV	Drawing Number:		Page: 3/7

Changed by: user93 | Date Changed: | Time Changed:

SAMSUNG CONFIDENTIAL
THIS DOCUMENT CONTAINS CONFIDENTIAL
AND PROPRIETARY INFORMATION OF
SAMSUNG ELECTRONICS CO'S PROPERTY.
DO NOT DISCLOSE TO OR DUPLICATE FOR OTHERS
EXCEPT AS AUTHORIZED BY SAMSUNG.

EXYNOS3830

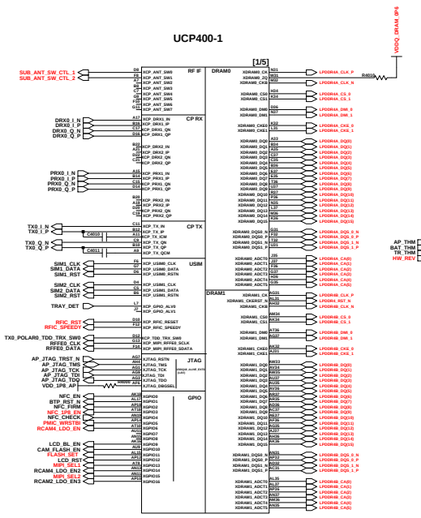

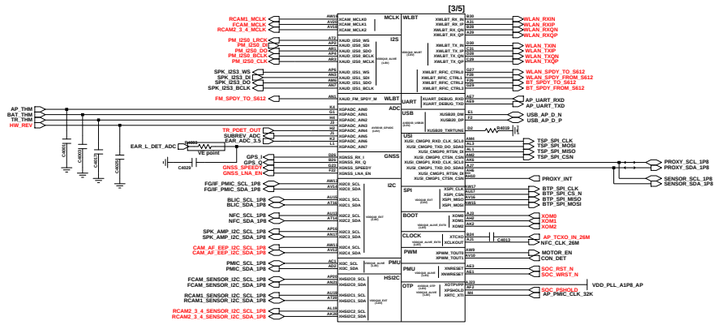

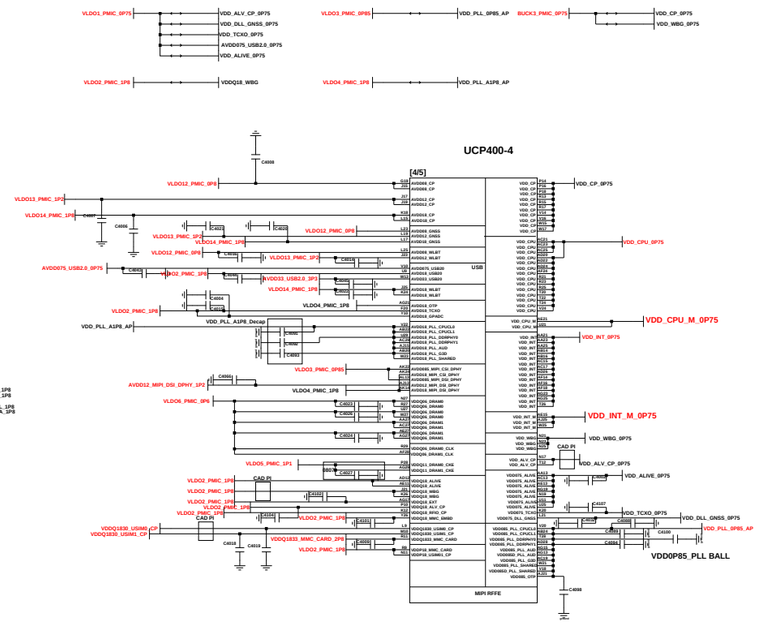

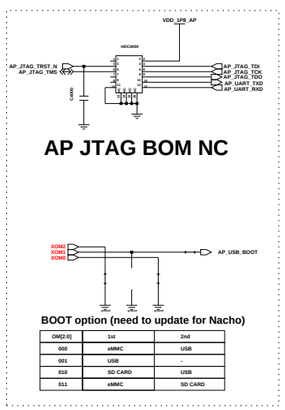

AP JTAG BOM NC

BOOT option (need to update for Nacho)

OM[2:0]	1st	2nd
000	eMMC	USB
001	USB	-
010	SD CARD	USB
011	eMMC	SD CARD

NFC OPTION

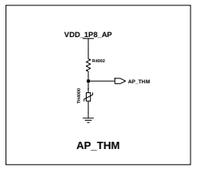

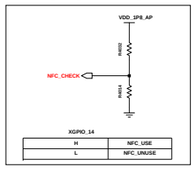

XGPIO_14

H	NFC_USE
L	NFC_UNUSE

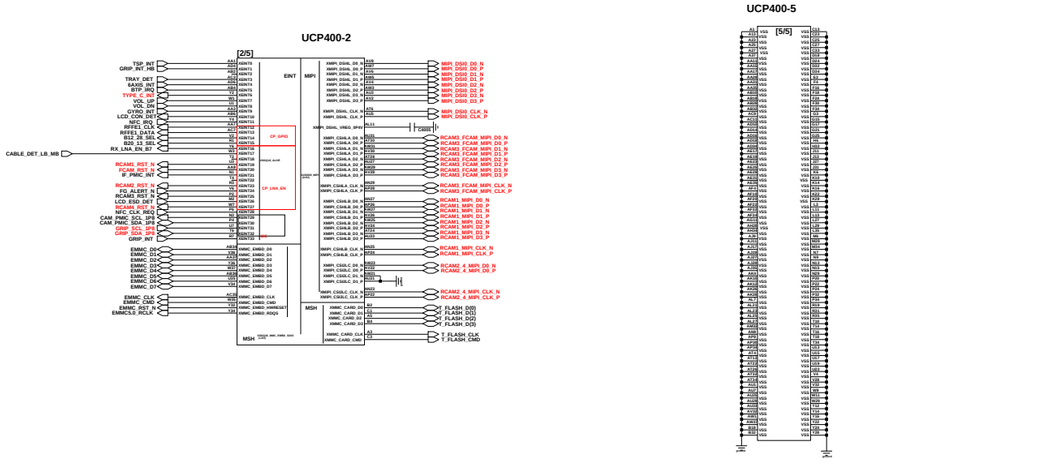

I2C Pull-up Register

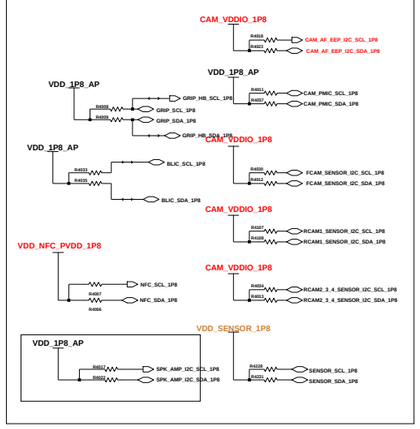

H/W Revision Setting

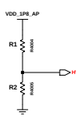

	HW ID	R1	R2	SUM
Bring up	0	GND	N	0
REV 0.0	1	820K	200K	660K
REV 0.1	2	390K	82K	452K
REV 0.2	3	360K	91K	451K
REV 0.2B	4	330K	120K	450K
REV 0.2C	5	300K	150K	450K
REV 0.3	4	330K	120K	450K
REV 0.3B	6	270K	180K	450K
REV 0.3C	6	270K	180K	450K
REV 0.4	7	240K	220K	460K
REV 0.5	6	270K	180K	450K

AP Decap

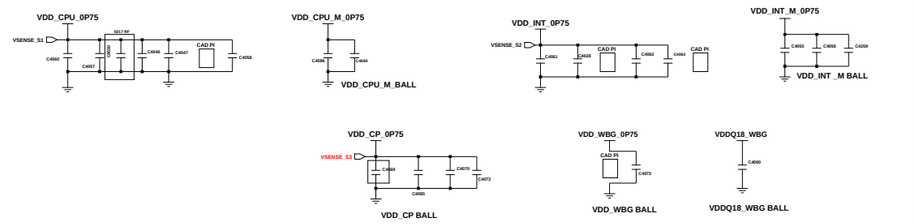

PCB JTAG

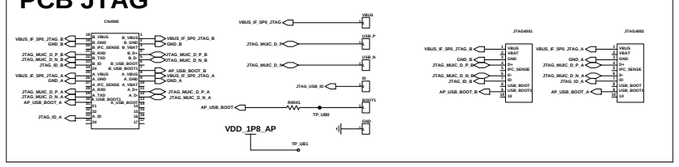

Changed by:	Date Changed:	Time Changed:	Engineer:		
			Design by:		
			R&D CHK:	TITLE:	Size
			DOC CTRL CHK:		
			MFG ENGR CHK:		
			QA CHK:	REV:	Drawing Number:

SAMSUNG CONFIDENTIAL
THIS DOCUMENT CONTAINS CONFIDENTIAL
AND PROPRIETARY INFORMATION OF
SAMSUNG ELECTRONICS CO'S PROPERTY.
DO NOT DISCLOSE TO OR DUPLICATE FOR OTHERS
EXCEPT AS AUTHORIZED BY SAMSUNG.

MAIN_PMIC

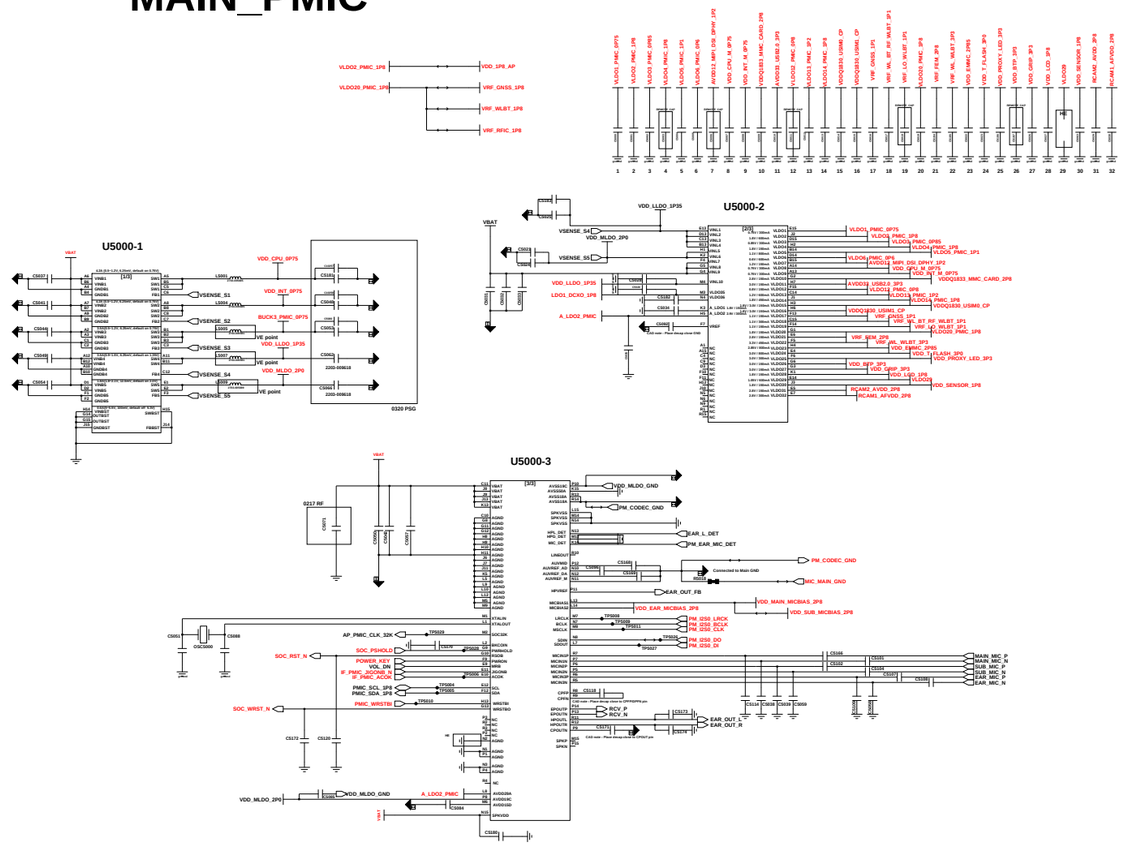

IF_PMIC

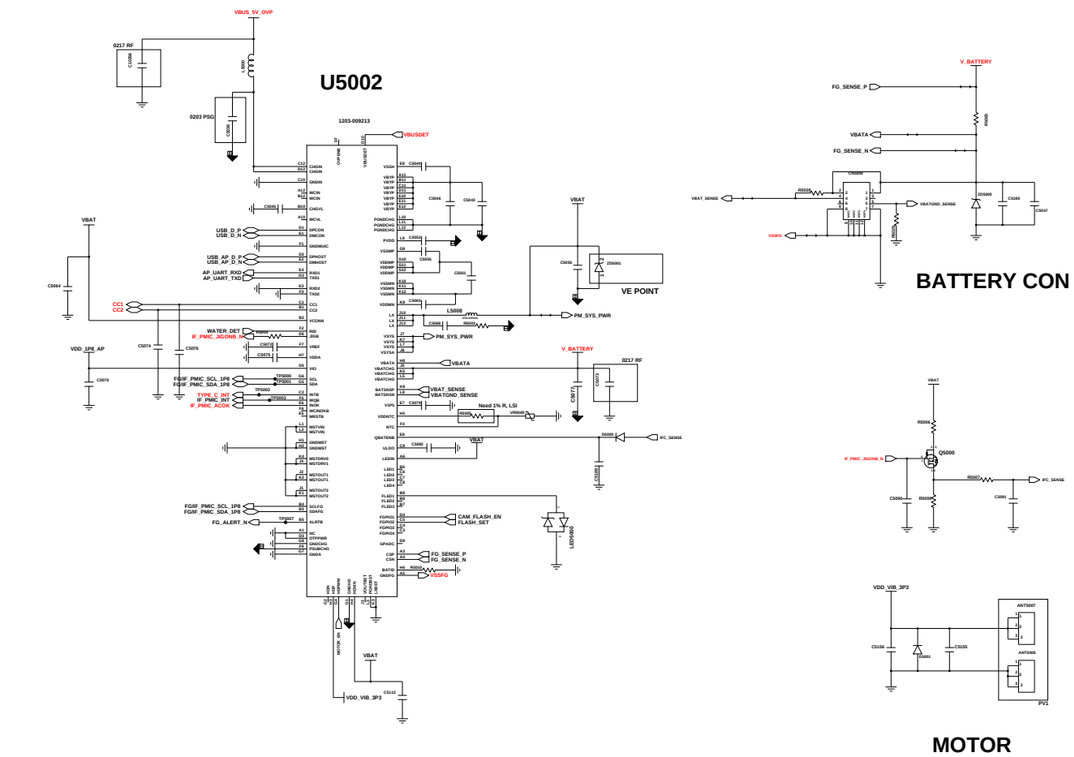

SIM & SD CARD (3IN3)

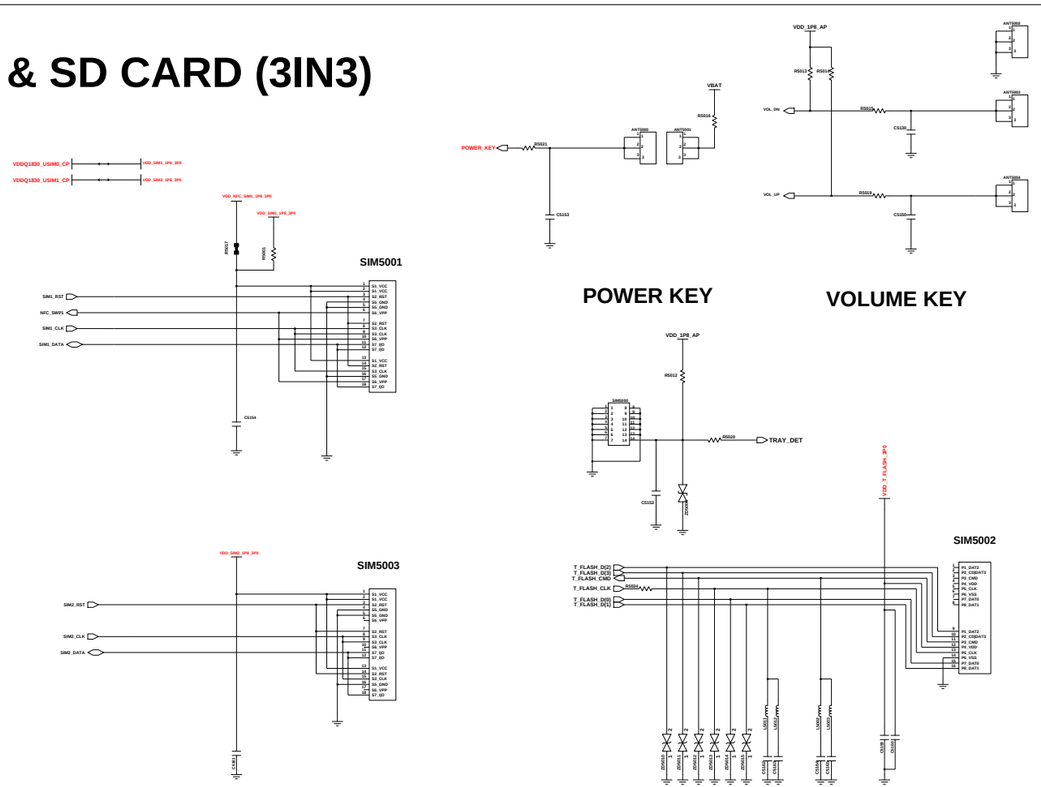

eMCP

* Default eMCP 3G LPDDR4 & 32GB eMMC 5.1 : 1108 - 000678
eMCP 4G LPDDR4 & 64GB eMMC 5.1 : 1108 - 000666
eMCP 6G LPDDR4 & 64GB eMMC 5.1 : 1108 - 000656

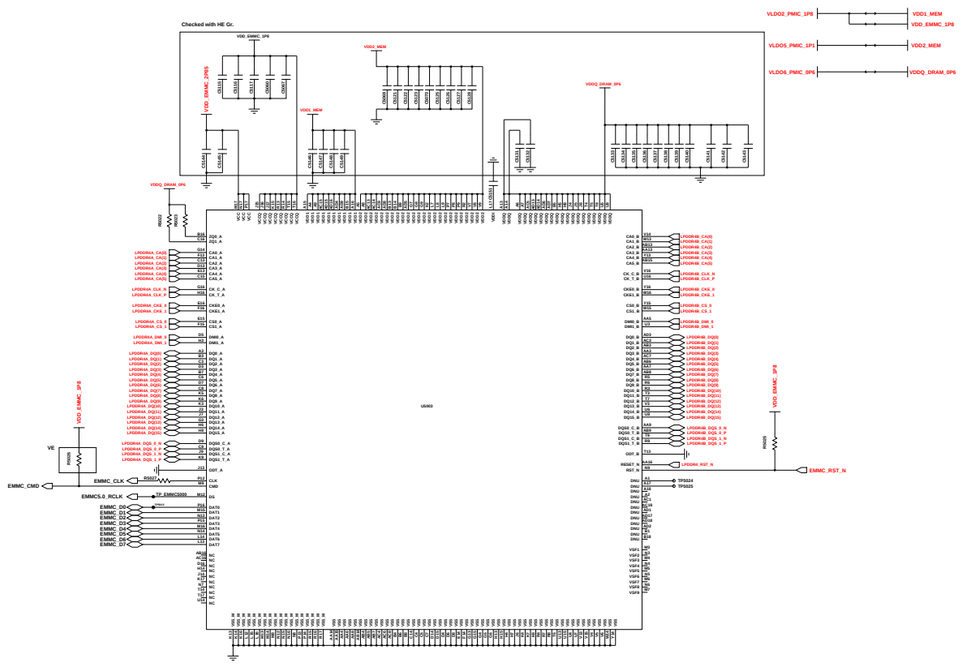

Engineer:					
Drawn by:					
R&D CHK:	TITLE:				Size:
DOC CTRL CHK:					
MFG ENGR CHK:					
Changed by:	Date Changed:	Time Changed:	QA CHK:	REV:	Drawing Number: Page:1p1

SAMSUNG CONFIDENTIAL
THIS DOCUMENT CONTAINS CONFIDENTIAL
PROPRIETARY INFORMATION THAT IS
SAMSUNG ELECTRONICS CO'S PROPERTY.
DO NOT DISCLOSE TO OR DUPLICATE FOR OTHERS
EXCEPT AS AUTHORIZED BY SAMSUNG.

BLIC

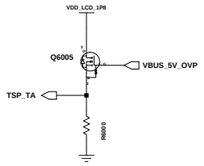

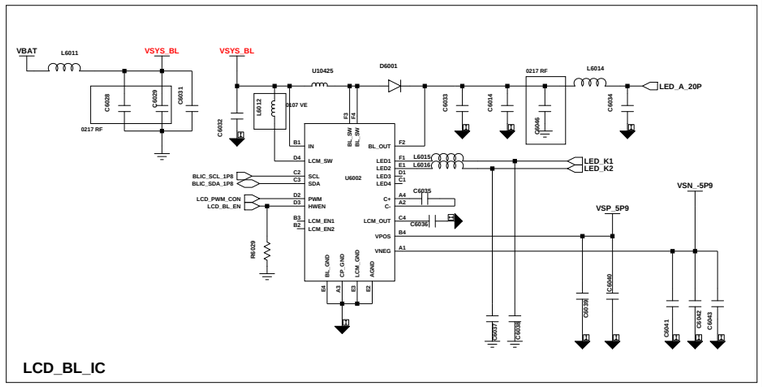

MAIN FPCB_PART (78pin) 6.55" HD+ TFT HID

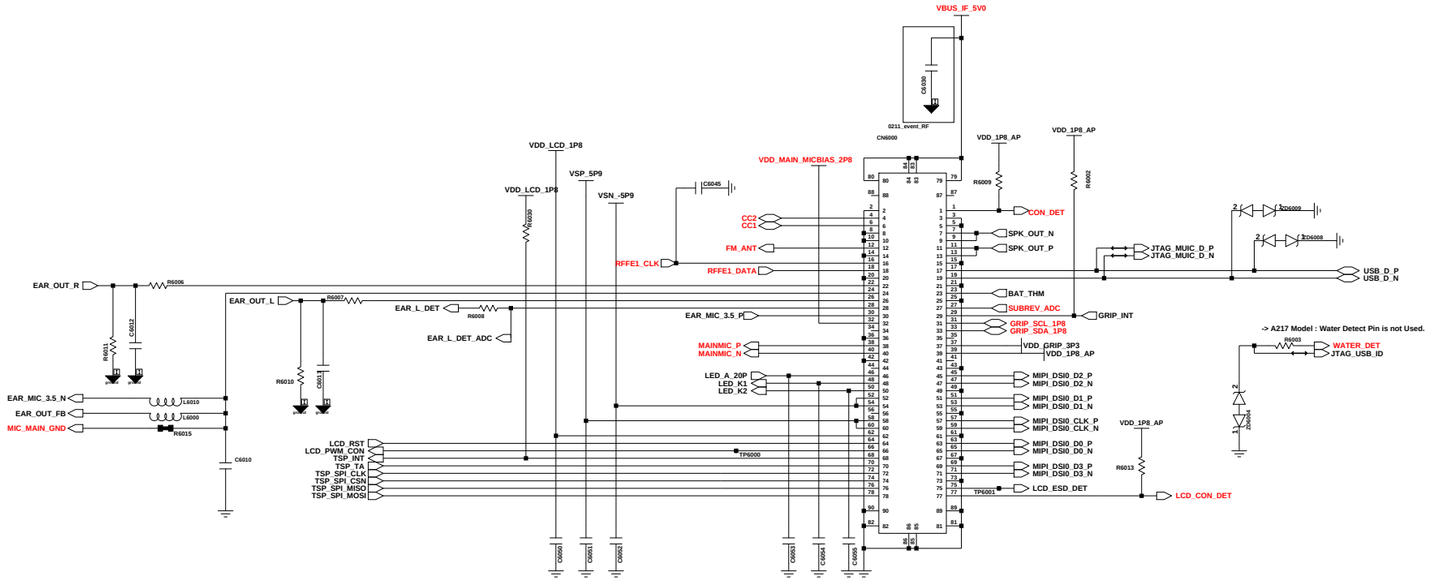

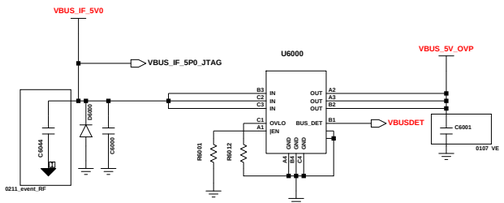

OVP (ETEK)

AUDIO_PART

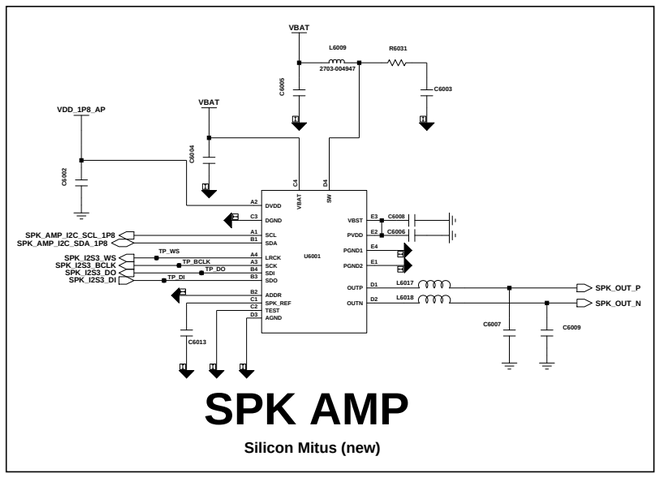

SPK AMP

Silicon Mitus (new)

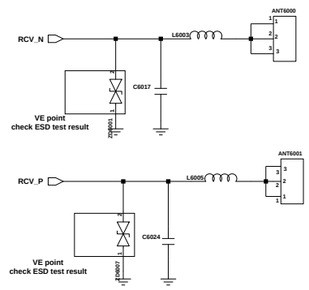

RCV CONTACT

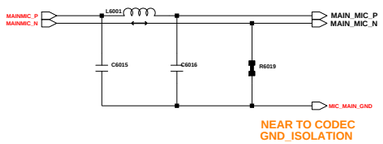

MAIN MIC

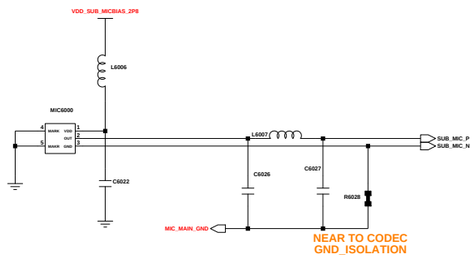

Sub MIC

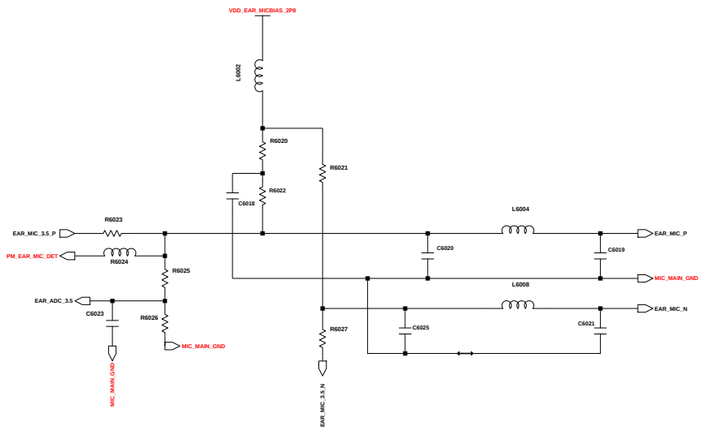

Ear MIC

Engineer:	
Drawn by:	
R&D CHK:	TITLE:
DOC CTRL CHK:	
MFG ENGR CHK:	
QA CHK:	

Size:

Changed by:	Date Changed:	Time Changed:	REV	Drawing Number:	Page:6/7

SAMSUNG CONFIDENTIAL
THIS DOCUMENT CONTAINS CONFIDENTIAL PROPRIETARY INFORMATION THAT IS SAMSUNG ELECTRONICS CO'S PROPERTY. DO NOT DISCLOSE TO OR DUPLICATE FOR OTHERS EXCEPT AS AUTHORIZED BY SAMSUNG.

CAMERA_PART

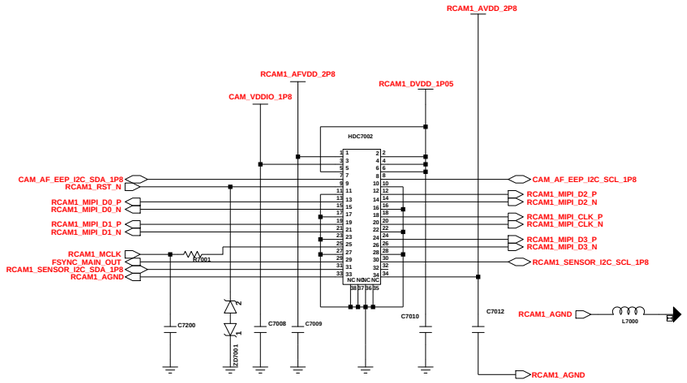

RCAM1_48M_S5KGM2SP_34pin

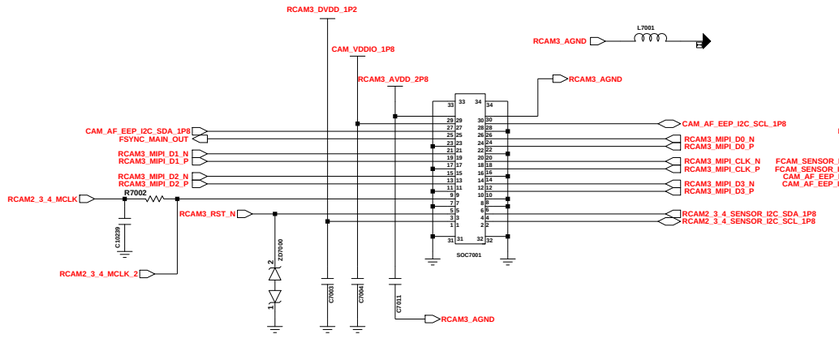

RCAM3_8M_UW_S5K4HAYX03_30pin

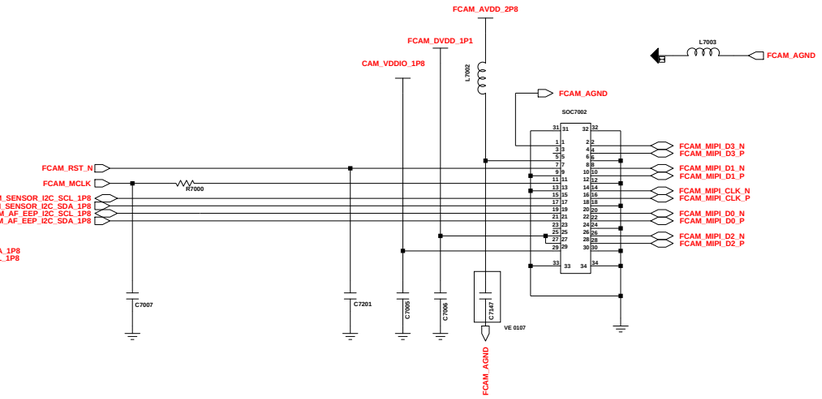

FRONT_13M FF_Hi1336B

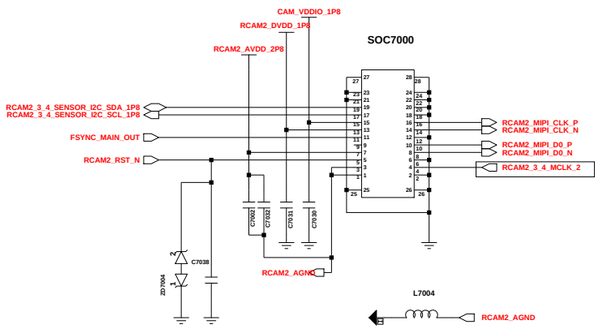

RCAM2_2M_BOKEH_GC02M1B_24pin

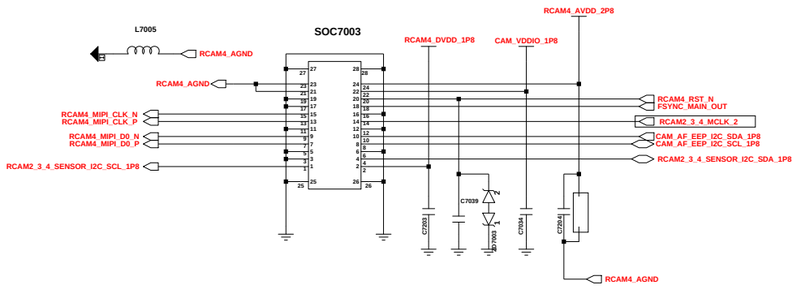

RCAM4_2M_MACRO_GC02M1_24pin

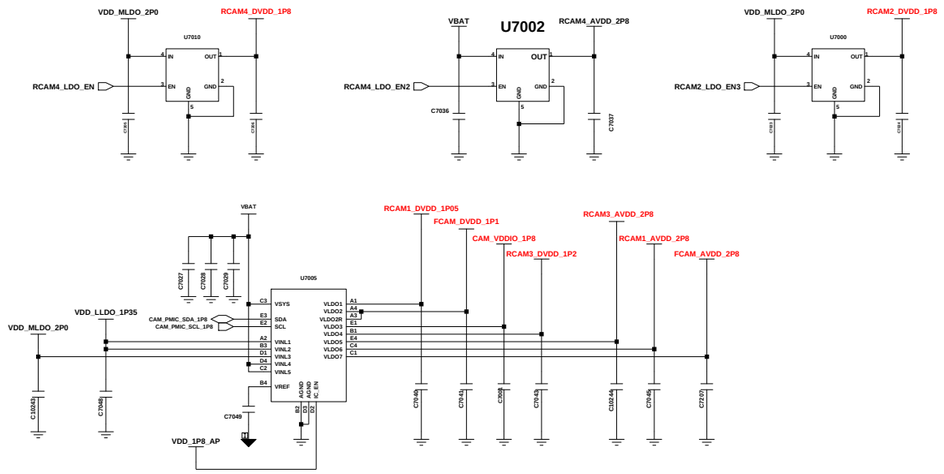

CAM PMIC

CAMERA MIPI SWITCH

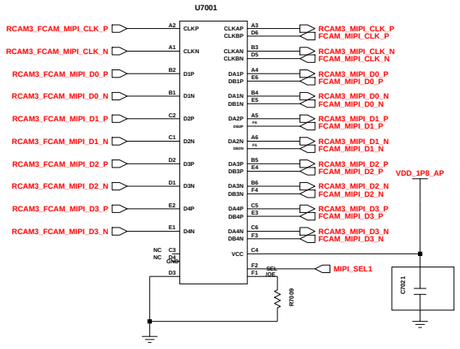

VE point : Maxscend MIPI Switch

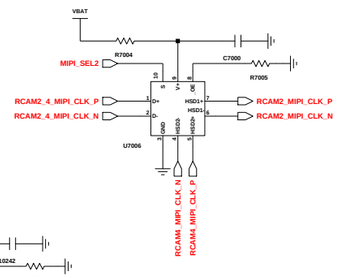

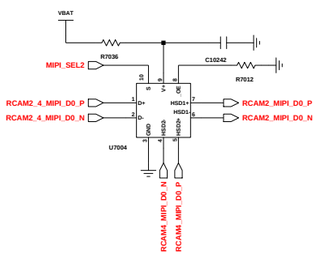

SHIELD CAN

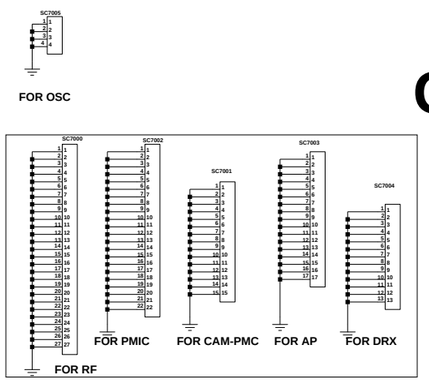

BOSS HOLE

GND CONTACT

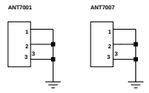

SMR Gasket

RF BAND

F(GLOBAL) R7003

M(LA) R7006 NC

N(KR) R7007 NC

	F (Global)	M (LA)	N (KR)
R7003	O		
R7006		O	
R7007			O

2D BARCODE

PCB BOSS SUS

MEMORY

3+32 R7008

4+64 R7013 NC

6+64 R7010 NC

Engineer:	
Drawn by:	CAMERA, DISPLAY
R&D CHK:	TITLE: Size:
DOC CTRL CHK:	
MFG ENGR CHK:	
QA CHK:	REV Drawing Number: Page: 2/2

Changed by: Date Changed: Time Changed:

SM-A217F/M
Common

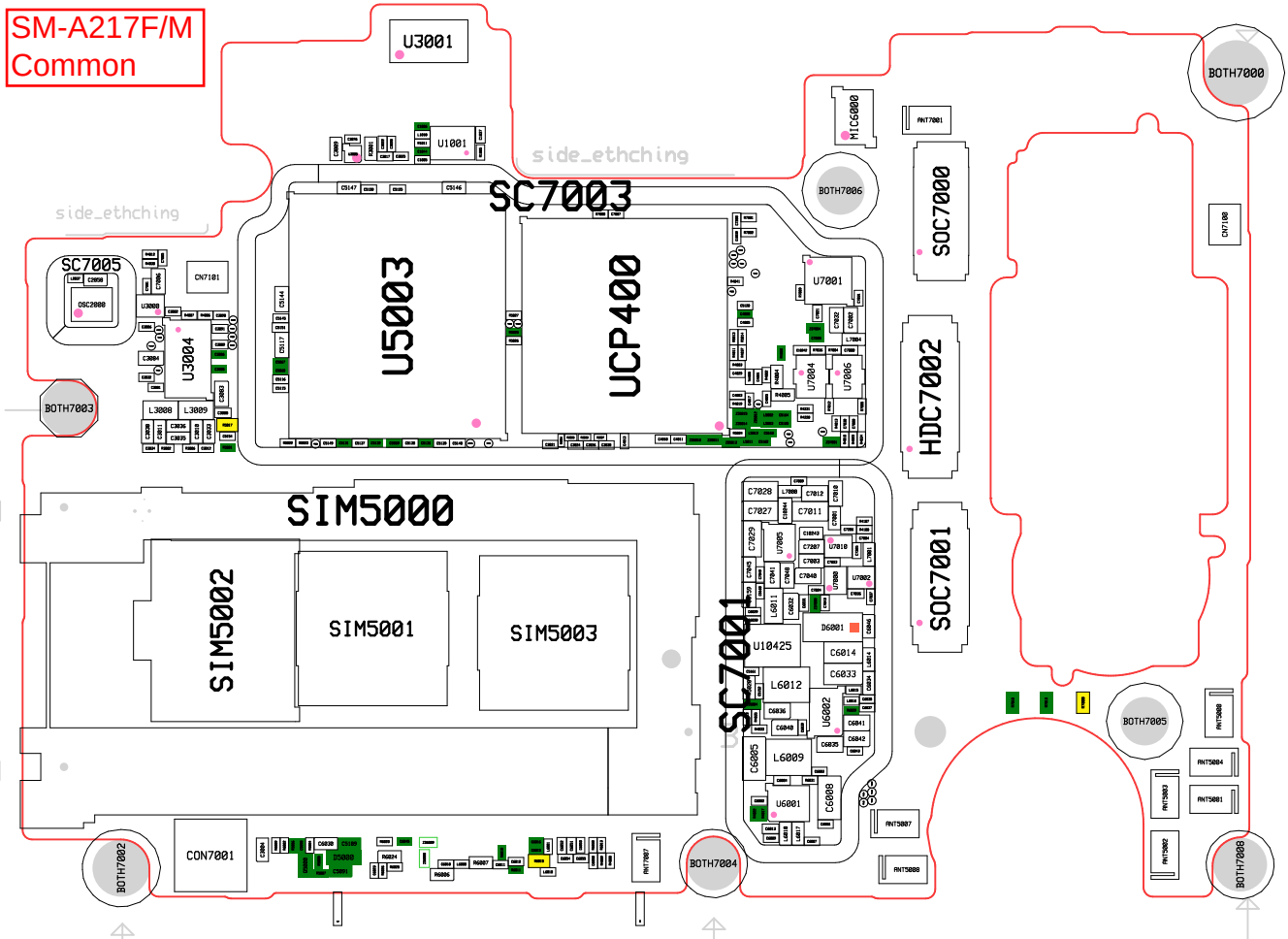
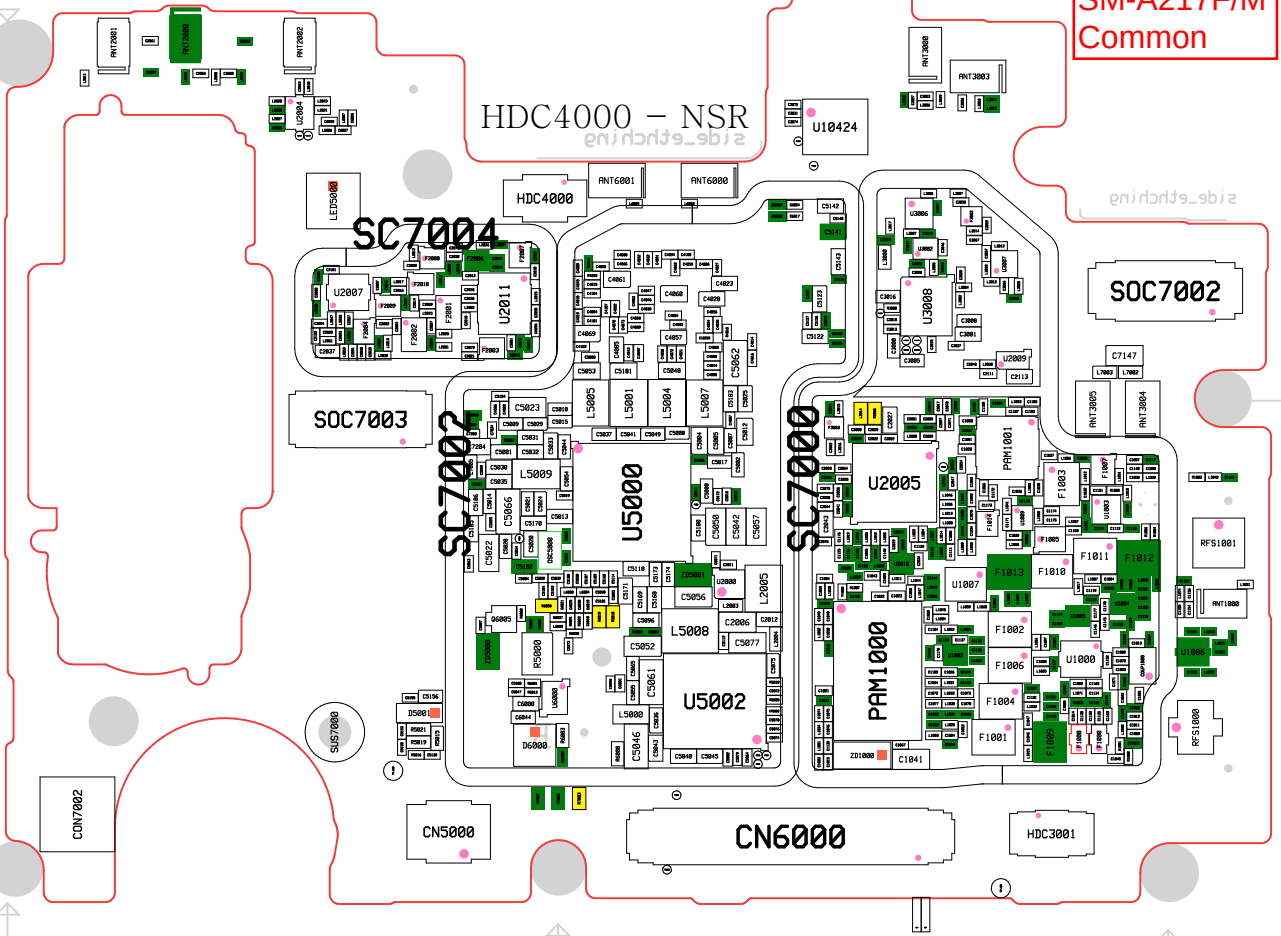
SM-A217F/M
Common